← Back to Modular Homes on pyramid.ie

Technical Specification Sheet

Container 14 — Modular Steel Structure

Pyramid Business Express Ltd — Official Distributor for Ireland of Unic Rotarex® Modular Homes

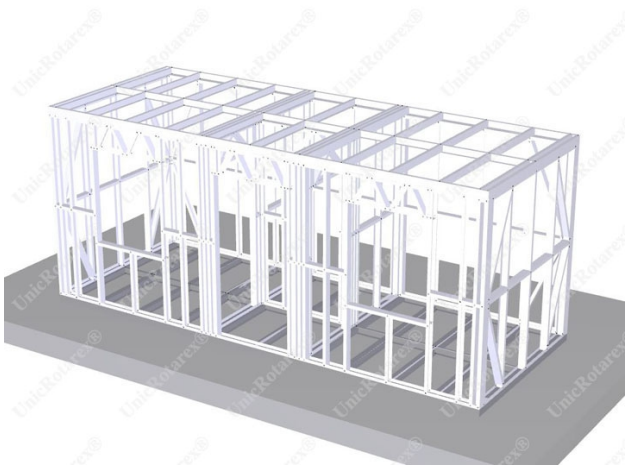

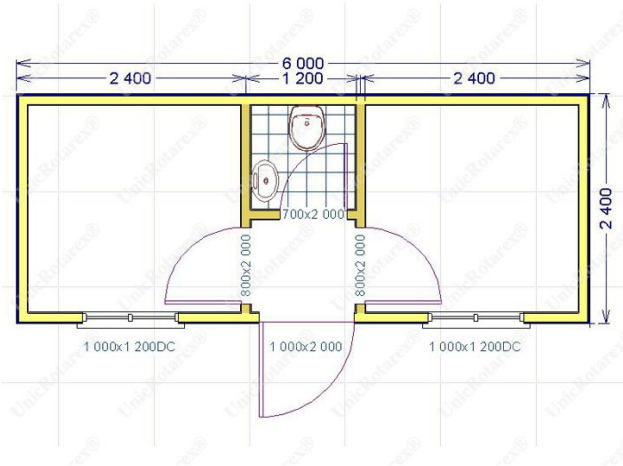

Total floor area	14.4 m²
Width	2.4 m
Length	6 m

This specification covers the dimensioned, pre-cut steel profile kit, complete with assembly fittings, collected at the Unic Rotarex® factory gate in Romania. Additional construction works (foundations, finishes, utilities) can be arranged locally in Ireland through Pyramid Business Express Ltd or your own contractors — these are standard building works that any competent team can carry out.

Prices shown are excluding VAT. Standard terms: 50% deposit, 50% on delivery. Delivery condition: FCA (Free Carrier), per INCOTERMS.

Structure fabrication time: 1 working day(s).

Pyramid Business Express Ltd — Official Unic Rotarex® Distributor for Ireland
This specification sheet is valid for 30 days from the date of download.

REQUEST A QUOTE →

Technical diagrams and structural data courtesy of Unic Rotarex® (Romania), the manufacturer. Pyramid Business Express Ltd is the appointed official distributor of Unic Rotarex® modular homes for Ireland.